Module 1: DC Circuit Analysis

Lecture 06&07

Topics Covered:

- *Thevenin's Theorem*
- *Maximum Power Transfer Theorem*

Thevenin's Theorem

"A linear two-terminal circuit can be replaced by an equivalent circuit consisting of a voltage source V_{Th} in series with a resistor R_{Th}, where V_{Th} is the open-circuit voltage at the terminals and R_{Th} is the equivalent resistance at the terminals when the independent sources are made inactive"

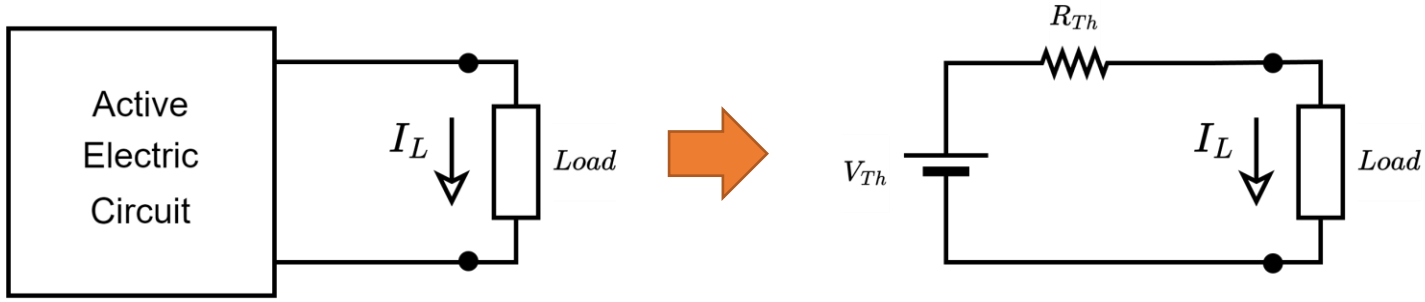

To find V_{Th}

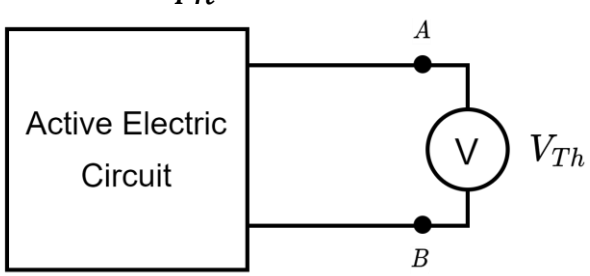

To find R_{Th}

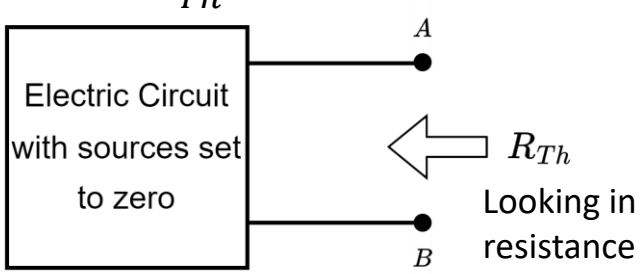

Illustration 1

Using Thevenin's theorem, determine the power dissipated in the 30 Ω resistor.

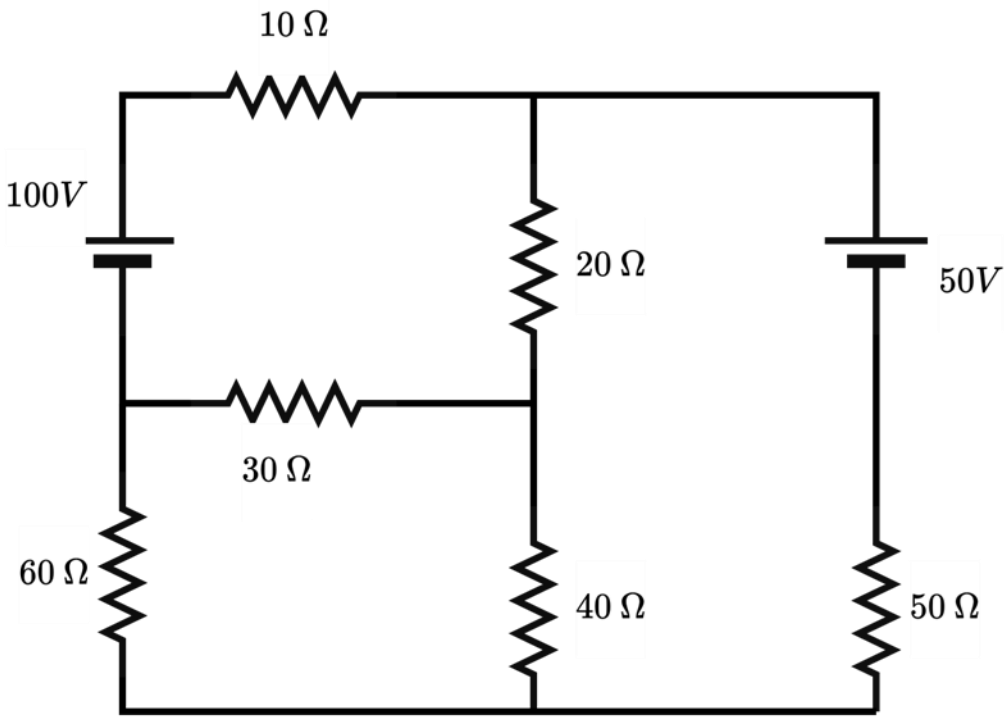

Ans: P = 63.6 W

Illustration 2

Using Thevenin's theorem, find the value of **R** such that the current through the 2 Ω resistor is 1 A

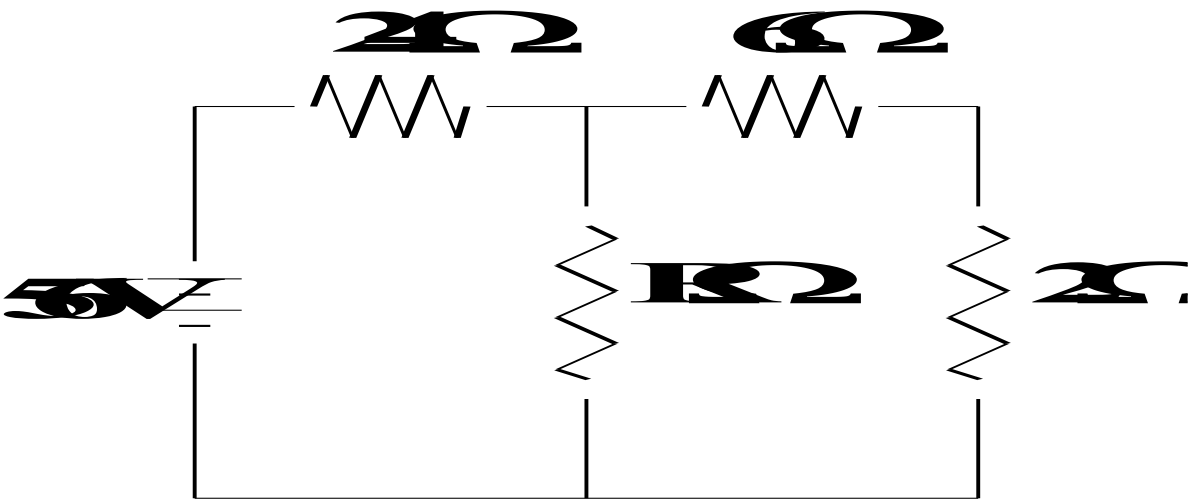

Ans: 8 Ω

Practice 1

For the circuit shown, find the current I_L through the 6 Ω resistor using Thevenin's theorem

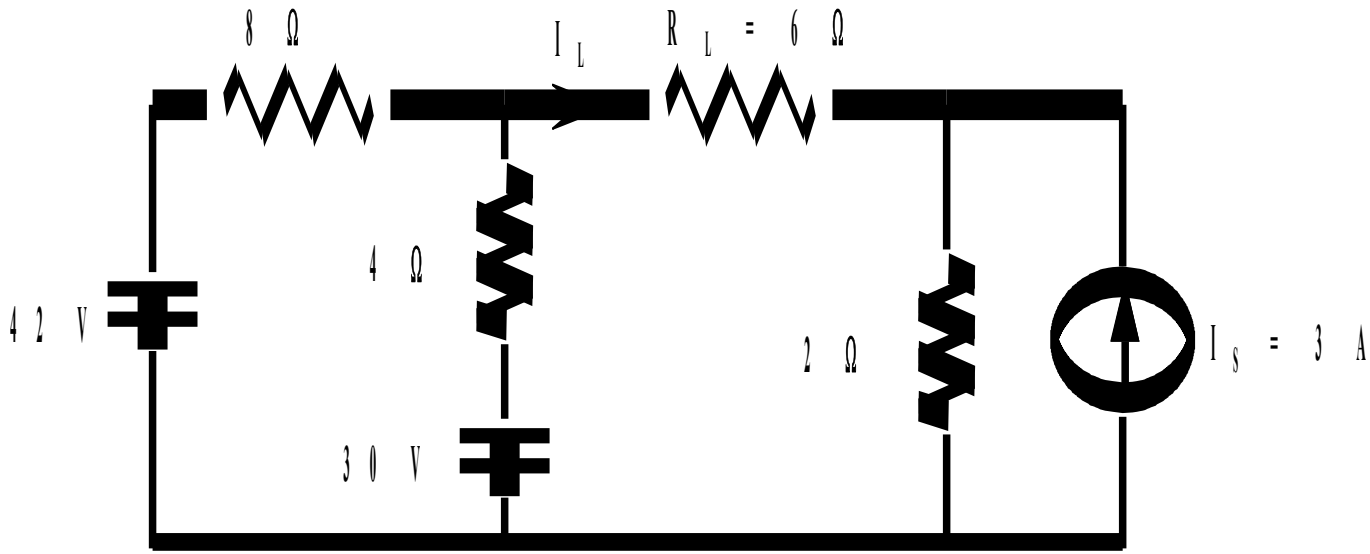

Ans: I_L = 2.625 A

Maximum Power Transfer Theorem

A network delivers maximum power to a load resistance R_L when R_L is equal to the Thevenin equivalent resistance of the network.

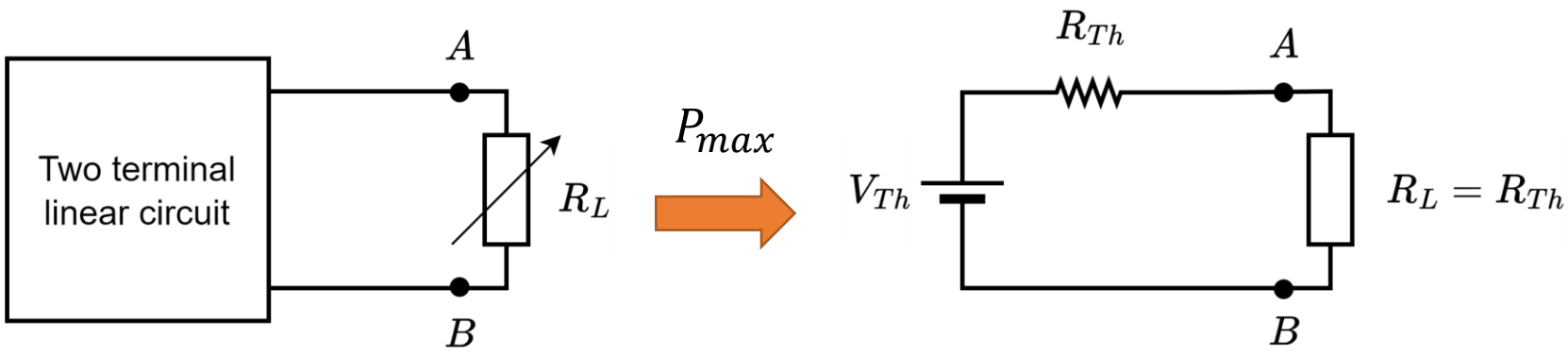

Proof

Consider the Thevenin's equivalent circuit of a network

$$I_L = \frac{V_{Th}}{R_{Th} + R_L}$$

$$P_L = \left(\frac{V_{Th}}{R_{Th} + R_L}\right)^2 R_L$$

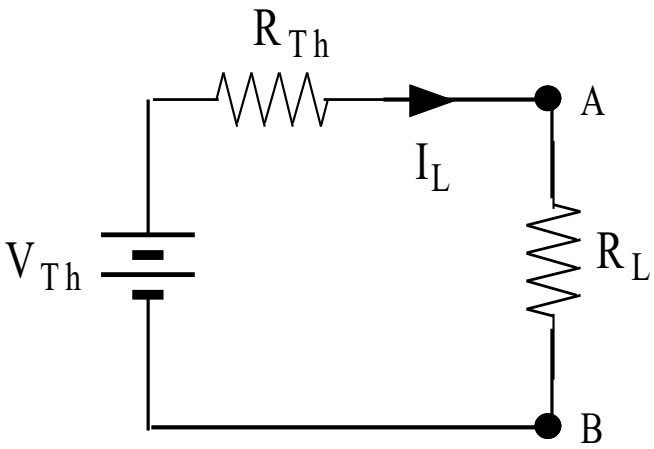

$$For P_L \text{ to be maximum}, \frac{dP_L}{dR_L} = 0$$

$$\text{which yields}, \boldsymbol{R_L = R_{Th}}$$

$$Maximum\ Power,$$

$$P_{L-max} = \left(\frac{V_{Th}}{R_{Th} + R_{Th}}\right)^2 R_{Th} = \frac{V_{Th}^2}{4R_{Th}}$$

Illustration 1

Obtain the maximum power that could be delivered to the load resistor (R) .

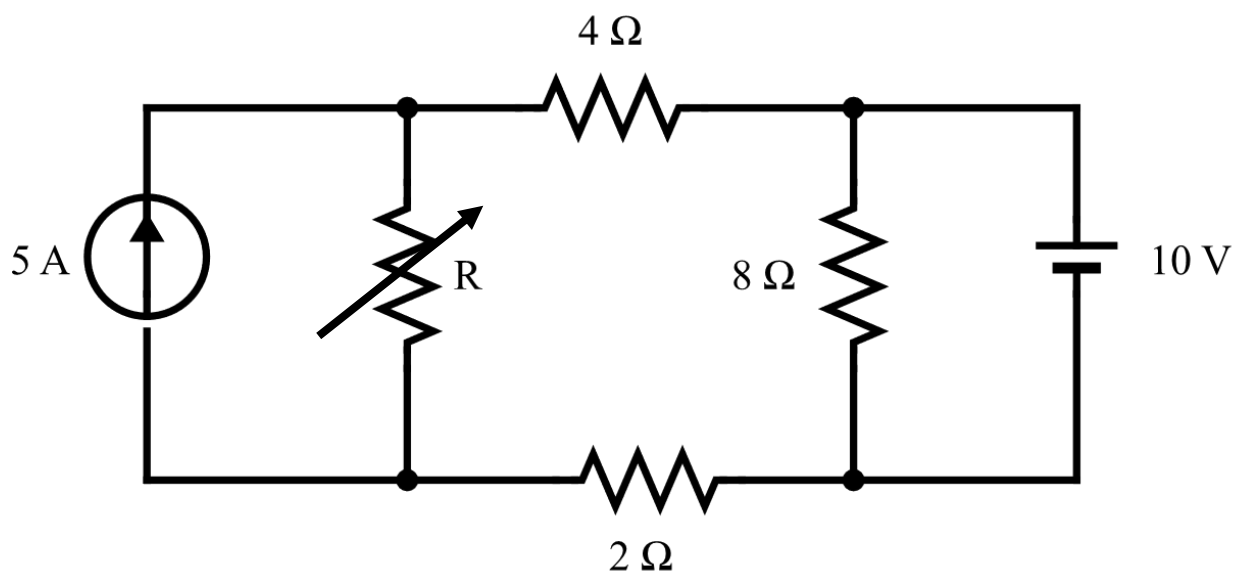

Answer: P_{max} = 66.67 W

Illustration 2

Find the value of the R_L such that maximum power is transferred to it by the source. Determine maximum power delivered to R_L

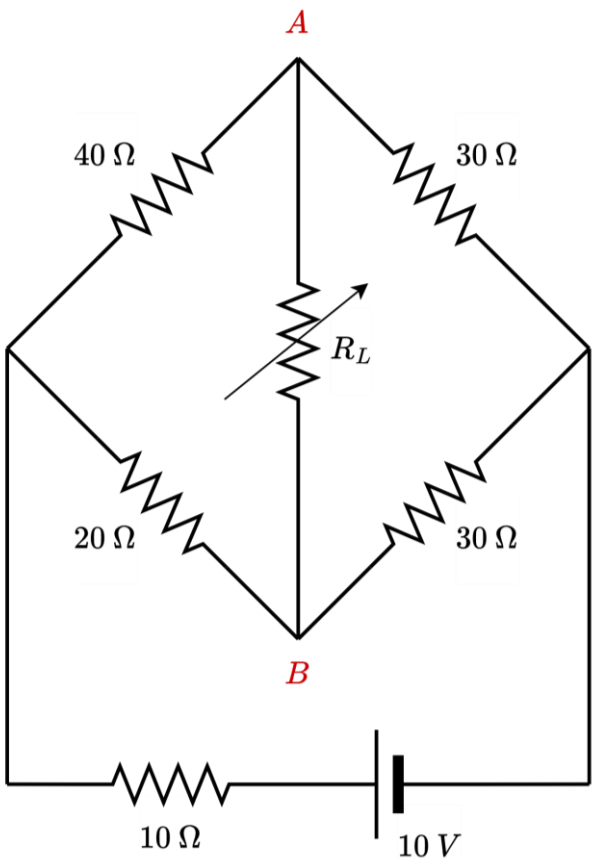

Answer: $R_{Th} = 29.361\ \Omega$

Practice

Find the value of the R_L in the given network for maximum power transfer. Also calculate the maximum power.

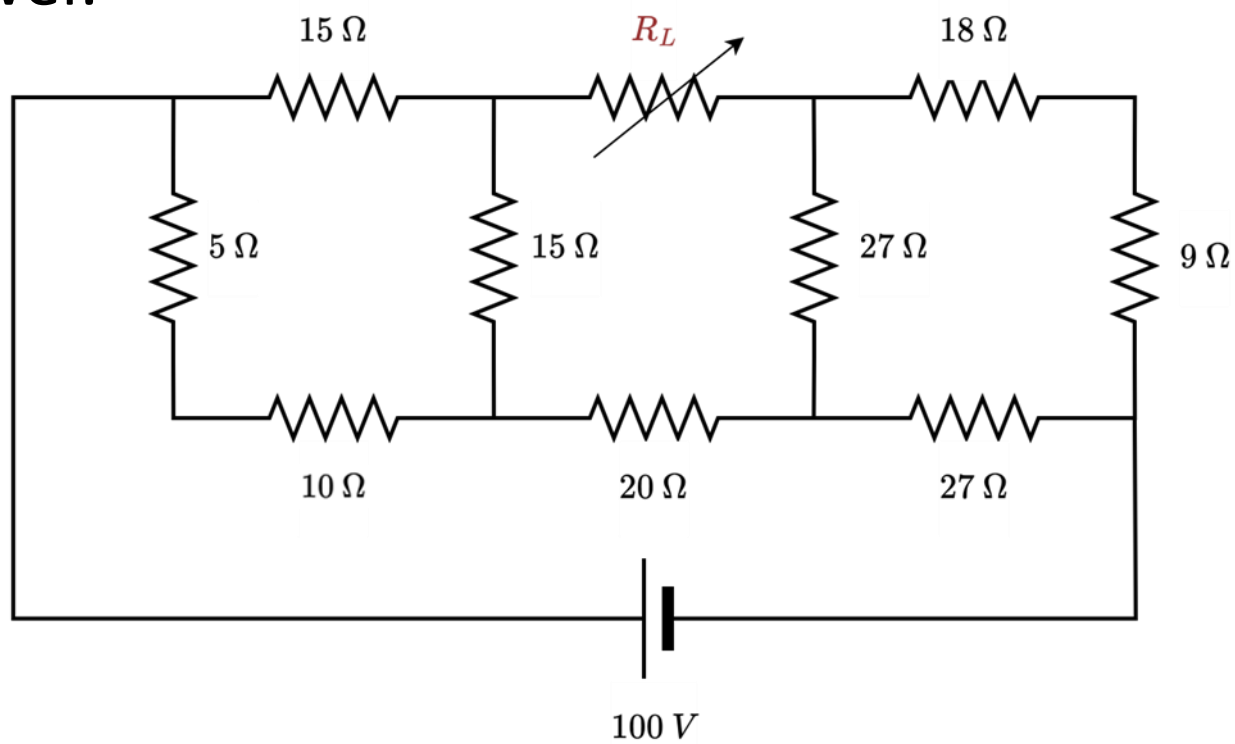

Answer: V_{Th} = 70.8333 V, R_{Th} = R_L = 23.9166 Ω, P_{max} = 52.4463 W

Maximum Power Transfer Theorem

- ✓ The **maximum power transfer theorem** *does not apply* when the **load resistance** R_L **is fixed** (unchangeable). That's because the theorem requires you to **tune** R_L to equal the Thevenin/source resistance.

- ✓ **With a fixed load, that assumption is violated:**

  - ❖You cannot satisfy R_L = R_{th} unless you can adjust R_L

  - ❖The theorem cannot guide how to choose R_{th} for a given fixed R_L .

Summary

- Enables us to model any complex network to a single voltage (V_{Th}) source in series with a resistance (R_{Th})
- V_{Th} is the open-circuit voltage across the load terminals
- R_{Th} is the input resistance at the load terminals when the independent sources are made inactive
- Maximum power is delivered to the load when the load resistance equals the source resistance $(R_L = R_{Th})$
- The efficiency of the circuit during maximum power transfer is 50%